ISSN 1021-4437, Russian Journal of Plant Physiology, 2025, Vol. 72:212. © Pleiades Publishing, Ltd., 2025.

RESEARCH PAPERS

Expression of the RBD Antigen Fused T4 Peptide and Human C5a Fragments of SARS-CoV-2 in *Nicotiana benthamiana*

N. H. Tue[a] (ORCID: 0000-0003-4646-7426), N. N. Luong[a] (ORCID: 0000-0002-6123-7437), N. Q. D. Tien[a] (ORCID: 0000-0002-7330-3139), and N. H. Loc[a, *] (ORCID: 0000-0002-6387-0359)

[a] *Institute of Bioactive Compounds and Department of Biotechnology, University of Sciences, Hue University, Hue, 49000 Vietnam*

**e-mail: nhloc@hueuni.edu.vn*

Received August 3, 2025; revised August 7, 2025; accepted August 7, 2025

Abstract—This study investigated the expression of a novel fusion peptide, Kozak-A3Dsp-RBD-T4-Linker-C5a-SEKDEL, in *Nicotiana benthamiana* plants, exploring its potential as a SARS-CoV-2 vaccine candidate. The 1392 bp sequence, encoding the SARS-CoV-2 RBD, a T4 peptide from the S2 subunit, and human C5a, was successfully cloned into the pMYV719 plant expression vector. This construct was then conjugated into *Agrobacterium tumefaciens* LBA4404 for transient expression in *N. benthamiana* leaves via infiltration. The *p19* gene was co-infiltrated to enhance peptide expression by inhibiting gene silencing. Successful infiltration was confirmed by PCR, showing a 1.4 kb DNA band consistent with the target sequence. Protein expression was subsequently analyzed by SDS-PAGE and western blot. A prominent protein band of approximately 55 kDa was observed, slightly larger than the theoretical 51.5 kDa, likely due to post-translational modifications common in plant systems. Western blot analysis confirmed specific binding of the antibody to the RBD-containing peptide. Expression levels varied across time points, with the highest signal intensity observed at 6 days post-infiltration. This finding aligns with established transient expression patterns in *N. benthamiana*. This study demonstrates the successful expression of a multi-component SARS-CoV-2 antigen in *N. benthamiana*, highlighting its potential for plant-based vaccine production.

Keywords: *Nicotiana benthamiana*, human C5a, receptor-binding domain, SARS-CoV-2, T4 peptide

DOI: 10.1134/S1021443725604586

INTRODUCTION

Since the emergence of the SARS-CoV-2 pandemic, scientists worldwide have tirelessly worked to develop therapies to combat the virus, with vaccines being one of the most widely adopted and effective solutions. Our improved understanding of coronavirus structure and function has significantly accelerated vaccine development. Different vaccines from various manufacturers offer varying degrees of efficacy against SARS-CoV-2. The development of these vaccines has been carefully evaluated based on factors such as safety, the duration of immunity they provide, their storage stability, the optimal administration methods (including timing of injections), and potential side effects [1].

Billions of vaccine doses have been pre-ordered by nations globally, with a substantial portion procured by high-income, developed countries. Vaccination efforts have prioritized individuals at the highest risk of severe complications, including the elderly, healthcare workers, and those with chronic health conditions. Emerging research suggests that heterologous prime-boost vaccination regimens (*e.g.*, combining different vaccine types) can offer superior protection against SARS-CoV-2 and elicit robust immune responses. For instance, studies have shown that a two-dose regimen combining the SARS-CoV-2 Pfizer-BioNTech and AstraZeneca vaccines generates strong immune responses against the virus. While initially targeting individuals aged 18 and above, recent studies by Pfizer have demonstrated the vaccine's efficacy and favorable safety profile in adolescents aged 12 to 15 [1, 2].

Beyond currently approved vaccines, research laboratories globally are intensifying efforts to produce novel vaccine candidates. Many of these efforts focus on fusing the RBD encoding sequences of SARS-CoV-2 with linker sequences or human immune-enhancing factors [3]. *N. benthamiana* plants have emerged as a prominent host system for the research and production of pharmaceutical proteins due to their advantages over animal cells and microorganisms [4]. Peptide T4, located at positions 1139–1170 within the S2 subunit of the SARS-CoV spike protein, resides in the critical linker region between the HR1 and HR2 repeats. This peptide demonstrates high conservation across SARS-CoV, BatCoV RaTG13, and recent SARS-CoV-2 variants [5]. Given the essential role of HR1 and HR2 in mediating coronavirus membrane

Table 1. Specific primers for PCR amplifications

Primers	Sequence 5' → 3'	Amplicion size, bp
K-A3-RBD-T4-L-C5a-S (F)	GCGCTCTAGAAAAACTAAAAGTAGAAG	1392
K-A3-RBD-T4-L-C5a-S (R)	GCGCGAGCTCTTAATTCAAACCAGAT	
RBD (F)	GGATCCTTTAGGGTACAGCCGACG	912
RBD (R)	AAGCTTGCAGTTGACGTCTTGATAGAGAA	

K, Kozak sequence; A3, A3Dsp; RBD are receptor binding domains; T4, T4 peptide; L, linker; C5a, human C5a; S, SEKDEL sequence; GGATCC, recognition site of BamHI; AAGCTT, recognition site of HindIII.

fusion, peptide T4 represents a promising target for SARS-CoV-2 vaccine development. The complement system, an integral part of the innate immune system, plays a crucial role in pathogen clearance. However, uncontrolled complement activation can significantly contribute to the pathogenesis of acute lung injury caused by viruses like H5N1, H7N9, and coronaviruses. In severe cases, excessive production of complement C5a exhibits potent biological activities, including activating phagocytic cells, generating reactive oxygen species, and promoting inflammatory sequelae [6]. Therefore, C5a plays a vital role in the body's defense against the SARS-CoV-2 virus.

While the individual immune roles of SARS-CoV-2 RBD [7], T4 peptide [5], and human C5a [8] are recognized, their combined expression as a fusion antigen-especially within the *N. benthamiana* plant system for inducing upper respiratory tract mucosal immunity-remains largely unexplored. This study, therefore, aimed to investigate the feasibility of cloning and expressing a novel fusion protein encompassing these SARS-CoV-2 (RBD, S2 subunit T4 peptide) and human C5a fragments in *N. benthamiana*, exploring its potential as a SARS-CoV-2 vaccine candidate.

MATERIALS AND METHODS

Cloning RBD-T4-Linker-C5a sequence in *Escherichia coli*. The synthetic sequence RBD-T4-Linker-C5a, a fusion of the SARS-CoV-2 RBD, a T4 peptide, a flexible linker, and human C5a, was engineered for optimized protein expression and secretion in plants. To achieve this, a rice 3D amylase signal peptide (A3Dsp) was incorporated for extracellular secretion [9], along with Kozak [10] and SEKDEL [11] sequences to boost protein production, and relevant restriction sites (XbaI, KpnI, and SacI) for subsequent cloning. The complete Kozak-A3Dsp-RBD-T4-Linker-C5a-SEKDEL sequence was initially synthesized and cloned into the pNHL22A vector (Fig. 1a). Subsequently, the Kozak-A3Dsp-RBD-T4 fragment was excised from pNHL22A and ligated into the pMYV719 plant expression vector (Fig. 1b). In a second ligation step, the Linker-C5a-SEKDEL sequence was also excised from pNHL22A and ligated into the previously modified pMYV719, yielding the final pNHL22B vector containing the entire desired construct (Fig. 1c). This new vector was then transformed into *E. coli* TOP10 strain, with cloning efficiency confirmed by restriction digestion [12].

Triparental mating. *Agrobacterium tumefaciens* LBA4404, *E. coli* TOP10 carrying the plant expression vector pNHL22B, and *E. coli* TOP10 carrying the helper plasmid pRK2013 were all cultured in Luria-Bertani (LB) medium supplemented with appropriate antibiotics. Rifamycin (100 μg/mL) was used for *A. tumefaciens* LBA4404, while kanamycin (100 μg/mL) was used for both *E. coli* TOP10 strains. The triparental mating was first initiated by co-culturing the three bacterial types on solid LB medium. After 3 days of incubation, *Agrobacterium* containing the pNHL22B vector was selected on solid LB medium supplemented with 100 μg/mL rifamycin and 100 μg/mL kanamycin. Screening of conjugated *A. tumefaciens* colonies was performed by PCR amplification and restriction digestion to confirm the presence of the pNHL22B vector [13].

PCR amplification. PCR amplification was performed using a primer pair specific for the Kozak-A3Dsp-RBD-T4-Linker-C5a-SEKDEL sequence (Table 1). The reaction mixture consisted of template DNA (either an *E. coli* colony or 20 ng of plasmid DNA extracted from *A. tumefaciens*), 10 pmol of each primer, 1× Green Master Mix (Promega, USA), and nuclease-free water (Thermo Fisher Scientific, USA) to a final volume of 20 μL. The PCR reaction began with initial template DNA denaturation at 95°C for 15 min; followed by 30 cycles of 95°C for 1 min, 55°C for 1 min, and 72°C for 1 min; and a final extension at 72°C for 10 min. The PCR product was subsequently analyzed on a 1% agarose gel.

***Agrobacterium* infiltration.** *Agrobacterium tumefaciens* LBA4404 strains, one harboring the pNHL22B vector and the other carrying the pMYV508 vector (containing the *p19* gene) (Fig. 2), were cultured in 5 mL of liquid LB medium supplemented with 50 μg/mL kanamycin and 100 μg/mL rifampicin. Cultures were grown for 2 days at 28°C in the dark with shaking at 200 rpm. Bacterial biomass was then harvested by centrifugation at 6000 rpm for 5 min and resuspended in MES buffer (10 mM 2-N-morpholino ethanesulfonic acid, 10 mM $MgSO_4$, pH 5.5) to an OD_{600} of 0.8–1. The resuspended bacterial cultures of both strains were mixed in a 1 : 1 (v/v), and 200 μM acetosyrin-

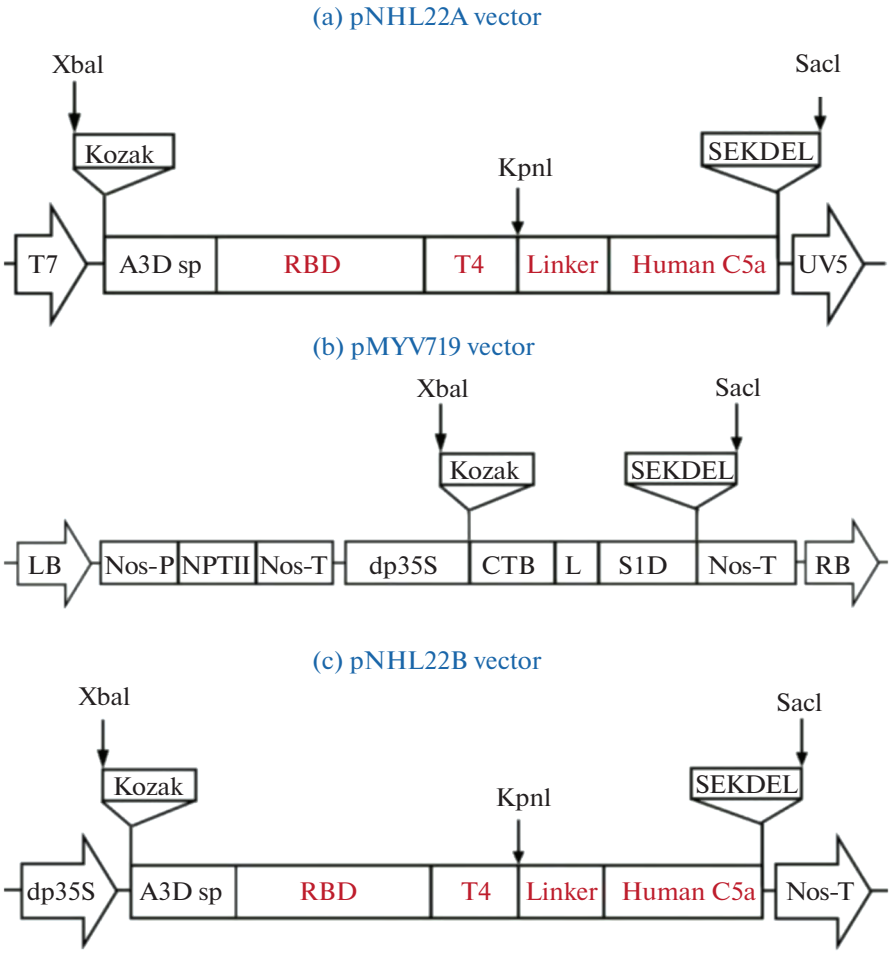

Fig. 1. (a) The pNHL22A vector. *Designations:* T7 is promoter derived from bacteriophage T7; Kozak, a sequence that helps initiate translation efficiently in eukaryotes; A3D sp, signal peptide sequence from the rice 3D amylase gene; RBD, receptor-binding domain from the SARS-CoV-2 spike S1 subunit; T4 peptide, T4 peptide sequence from the SARS-CoV-2 spike S2 subunit; Linker, a flexible amino acid sequence used to connect different protein domains; Human C5a, the genetic sequence encoding the human C5a protein; SEKDEL (Ser-Glu-Lys-Asp-Glu-Leu sequence), an endoplasmic reticulum (ER) retention signal, which helps keep proteins within the ER lumen; LacUV5, lacUV5 promoter. (b) Plant expression vector pMYV719. *Designations:* LB is left border sequence; RB, right border sequence; S1D, S1D epitope sequence; CTB, coding sequence for the B subunit of cholera toxin; dp35S, duplicated CaMV (cauliflower mosaic virus) 35S promoter; Nos-T, terminator sequence from the nopaline synthase gene; Nos-P, promoter sequence from the nopaline synthase gene; NPTII, neomycin phosphotransferase II; L, a linker sequence consisting of Gly-Pro-Gly-Pro. The CTB-L-S1D sequence, including Kozak and SEKDEL sequences, will be removed from the vector using XbaI and SacI. Subsequently, the A3Dsp-RBD-T4-Linker-C5a sequence, which also includes Kozak and SEKDEL sequences, will be inserted into the vector at this site. (c) map of pNHL22B vector.

gone was added. This mixture was incubated in the dark for 1–2 h before being infiltrated into the abaxial (underside) surface of the young *N. benthamiana* leaves (typically the third leaf from the apex). After 3–12 d, the infiltrated leaves were harvested and thoroughly washed to maximize *Agrobacterium* removal from the leaf surface for transgene identification prior to sodium dodecyl sulfate-polyacrylamide gel electrophoresis (SDS-PAGE) and western blot analysis. For transgene identification, total DNA was isolated from *Agrobacterium*-infiltrated *N. benthamiana* leaves using the cetyltrimethylammonium bromide (CTAB) method [14]. The presence of the RBD-T4-Linker-C5a sequence was then confirmed by PCR amplification as described in the "PCR amplification" section.

Production of RBD peptide. The RBD sequence, utilized as a positive control in western blot, was obtained by PCR amplification from the pNHL22B vector using a specific primer pair containing two recognition sites for BamHI and HindIII enzymes (Table 1). After purification, the RBD sequence was cloned into the pGEM-T Easy vector and transformed into *E. coli* TOP10. Recombinant *E. coli* TOP10 colonies carrying the RBD sequence were screened by PCR. The RBD sequence was then excised from the recombinant pGEM-T Easy vector using BamHI and HindIII, and ligated into the linearized pQE30 expression vector also digested with the same two enzymes. The ligation product was then transformed into *E. coli* TOP10, and transformants were verified by restriction digestion and

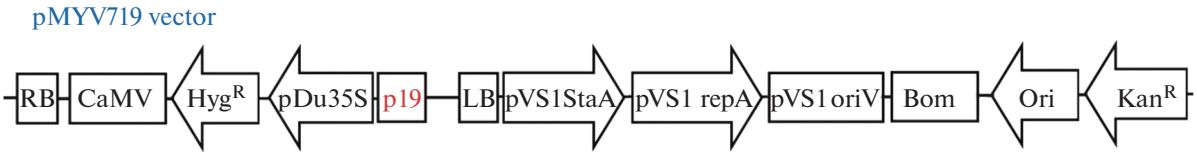

Fig. 2. Vector pMYV508. *Designations:* RBis right border; CaMV, cauliflower mosaic virus; Hyg^R, hygromycin resistant gene; pDu35S, duplication of CaMV 35S promoter; *p19*, a gene-silencing suppressor gene; LB, left border; pVS1 StaA, stability protein from the plasmid pVS1 that is essential for stable plasmid segregation in *Agrobacterium*; pVS1 repA, replication protein from the plasmid pVS1 that permits replication of low-copy plasmids in *Agrobacterium*; pVS1 oriV, origin of replication from the plasmid pVS1 that permits replication of low-copy plasmids in *Agrobacterium*; Bom, basis of mobility region from pBR322; Ori, high-copy number origin of replication; Kan^R, kanamycin resistant gene.

PCR amplification. The recombinant pQE30/RBD vector was extracted from *E. coli* TOP10 and subsequently transformed into *E. coli* M15 for RBD peptide expression. *E. coli* M15 harboring pQE30/RBD was cultured in 10 mL of LB medium supplemented with 50 μg/mL ampicillin at 37°C with shaking at 180 rpm until the OD_{600} reached 0.6. Then, 0.5 mM of the inducer isopropyl β-D-1-thiogalactopyranoside (IPTG) was added, and the culture was incubated at 37°C for 4 h. Bacterial biomass was harvested by centrifugation at 13000 rpm for 5 min. Total soluble protein was extracted in phosphate-buffered saline (PBS) buffer (pH 7.4) and stored at 4°C for use in western blot analysis.

Western blot analysis. Two grams of *Agrobacterium*-infiltrated *N. benthamiana* leaves were ground in liquid nitrogen, and total soluble proteins (TSP) were extracted using 1 mL of phosphate buffer (pH 7.0). Total soluble proteins content was determined by the method of Bradford [15]. Fifty micrograms of TSP were denatured at 95°C for 10 min before SDS-PAGE. Electrophoresis was performed at 50 V for 90 min for the 3% stacking gel, followed by 80 V for 120 min for the 12% separating gel. After electrophoresis, one gel was stained with Coomassie Brilliant Blue, while the second gel was blotted onto a nitrocellulose membrane (Novex™, Thermo Fisher Scientific) at 145 mA for 3 h using a Mini-Transblot system (Bio-Rad, USA). The nitrocellulose membrane was then blocked with 5% skim milk (Sigma-Aldrich, USA) at 37°C for 1 h with gentle agitation to prevent non-specific binding, followed by three 15-min washes with Tris-buffered saline with Tween-20 (TBST) buffer. Next, the membrane was incubated with a SARS-CoV-2 Spike RBD monoclonal antibody (R&D SYSTEMS, MAB10540-SP, USA) diluted 1 : 2000 in blocking buffer at 37°C for 2 h with gentle agitation. The membrane was then washed three times with TBST buffer, 15 min each wash, with gentle agitation. Subsequently, the membrane was incubated with an alkaline phosphatase-conjugated Goat Anti-Mouse IgG secondary antibody (Abcam, USA) diluted 1 : 5000 at 37°C for 2 h with gentle agitation. The membrane was washed three times with TBST buffer and once with TMN buffer (100 mM Tris base, pH 9.5, 5 mM $MgCl_2$, and 100 mM NaCl). Antigen-antibody binding signals were developed by colorimetric reaction with BCIP/NBT (B6404; Sigma-Aldrich) for 3 min in the dark. Signal intensity was measured using ImageJ software (v.1.52).

RESULTS

Production of RBD Peptide

The plant expression vector pNHL22B, which carries the synthetic gene sequence Kozak-A3Dsp-RBD-T4-Linker-C5a-SEKDEL, was successfully constructed through two main ligation steps in a previous study [12]. First, the Kozak-A3Dsp-RBD-T4 sequence (about 1.1 kb) from the pNHL22A vector was ligated into the plant expression vector pMYV719. Next, the Linker-Human C5a-SEKDEL fragment (about 0.3 kb), also from pNHL22A, was ligated into this intermediate pMYV719/Kozak-A3Dsp-RBD-T4 vector. The presence of the complete Kozak-A3Dsp-RBD-T4-Linker-Human C5a-SEKDEL sequence within the final pNHL22B vector was confirmed by both restriction digestion and PCR amplification, yielding the expected 1.4 kb product.

The RBD peptide was employed as a positive control in the western blot analysis to evaluate the expression of the fused RBD-T4-Linker-Human C5a peptide. To obtain the RBD sequence, the 912 bp RBD DNA was PCR-amplified from the pNHL22A vector using a specific primer pair containing BamHI and HindIII recognition sites and was then cloned into the pGEM-T Easy vector. Once a sufficient copy number was obtained from *E. coli* biomass, the RBD sequence was excised from the pGEM-T Easy vector using BamHI and HindIII and then inserted into the pQE30 expression vector, which had also been linearized with the same two enzymes. The recombinant pQE30/RBD vector was sequentially transformed into *E. coli* TOP10 for multiplication and subsequently into *E. coli* M15 for RBD peptide expression. The experimental results are presented in Fig. 3.

IPTG was used as an inducer to enhance RBD peptide synthesis in *E. coli* M15, owing to the lac operator present on the pQE30 vector. The RBD peptide fragment was obtained by lysing the recombinant *E. coli* M15 bacterial biomass with PBS buffer (pH 7.4). Following SDS-PAGE electrophoresis, the RBD protein

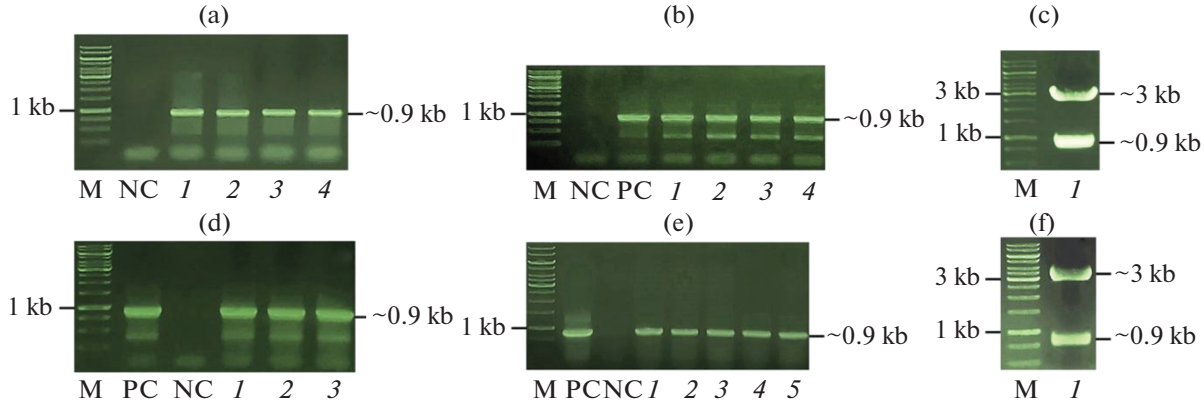

Fig. 3. Steps of cloning of RBD sequence into pQE30 expression vector. (a) PCR amplification of the RBD sequence from pNHL22A vector. Numbers (*1*)–(*4*) indicate 0.9 kb RDB sequence amplified from pNHL22A. (b) PCR amplification of the RBD sequence (0.9 kb) from pGEM-T Easy/RBD vector. Numbers (*1*)–(*4*) indicate PCR product obtained from different *E. coli* colonies posses pGEM-T Easy/RBD vector. (c) Electrophoregram of restriction digestion of pGEM-T Easy/RBD vector, where (*1*) indicate two fragments 0.9- and 3-kb of pGEM-T Easy/RBD vector after digestion with HindIII and BamHI enzymes. (d) PCR amplification of the RBD sequence (0.9 kb) in pQE30/RBD vector from *E. coli* TOP10.PC, pNHL22A vector; (*1*)–(*3*) indicate PCR product obtained from different *E. coli* colonies. (e) PCR amplification of the RBD sequence in pQE30/RBD vector from *E. coli* M15. (*1*)–(*5*), different M15 colonies. (f) Restriction digestion of pQE30/RBD vector. (*1*) pQE30/RBD vector digested with HindIII and BamHI. Amplification of PCR from PC, pNHL22A vector and NC, distilled water where used as control. M designates GeneRuler 1 kb DNA Ladder (Thermo Fiher Scientific).

band was prominent and approximately 35 kDa in size, about 2 kDa higher than predicted (Fig. 4). Guan et al. [16] studied the effect of acidic amino acids on the difference between expected and actual protein molecular weights. Their study provided the formula:

$$y = 276.5x - 31.33,$$

where x represents the percentage of acidic amino acids and y represents the average molecular weight difference per amino acid. Indeed, the RBD peptide contains 24 acidic amino acids (including glutamic acid (*E*) and aspartic acid (*D*)), accounting for approximately 8% of the total amino acid composition. Applying this formula yields $y = -9.21$, indicating a clear difference between the theoretical and experimentally observed molecular weights of the RBD peptide.

Co-infiltration of RBD-T4-Linker-C5a Peptide and p19 in N. benthamiana Leaves

The *p19* gene was co- infiltrated to enhance the expression of the RBD-T4-Linker-C5a peptide in *N. benthamiana* leaves. p19 functions by sequestering double-stranded RNA, thereby inhibiting the gene-silencing pathway [17]. Numerous studies have demonstrated higher transient protein expression efficiency when co-infiltrating with tomato bushy stunt virus (TBSV) *p19* [18] or when using other enhancing factors such as geminivirus promoters with a dual terminator [19] or chemical compounds like 5-azacytidine (AzaC), ascorbic acid, or Tween-20 [20]. In this study, *N. benthamiana* leaves were simultaneously infiltrated with two *A. tumefaciens* LBA4404 strains, one harboring the pNHL22B vector and the other carrying the pMYV508 vector (containing the *p19* gene). After 6, 9, and 12 days post-infiltration, leaves were harvested and ground in liquid nitrogen to extract total DNA and total soluble proteins.

The presence of the target sequence Kozak-A3Dsp-RBD-T4-Linker-C5a-SEKDEL was preliminarily checked by PCR. Results showed a DNA band at 1.4 kb, consistent with its predicted size (Fig. 5). Although some other DNA bands appeared due to non-specific template-primer binding, the absence of the 1.4 kb band in both negative controls (NC1 is no template DNA; NC2 is total DNA from non-transgenic leaves) confirmed that the PCR reaction was performed under appropriate conditions. Therefore, it can be initially concluded that the Kozak-A3Dsp-RBD-T4-Linker-C5a-SEKDEL sequence was successfully infiltrated into *N. benthamiana* leaves.

Protein Expression Analysis by SDS-PAGE and Western Blot Analysis

The expression of the Kozak-A3Dsp-RBD-T4-Linker-C5a-SEKDEL target sequence at 6, 9, and 12 days post-infiltration was analyzed using SDS-PAGE and western blotting.

SDS-PAGE of TSP revealed a prominent protein band with a molecular mass of approximately 55 kDa (Fig. 6a), which is slightly larger than its theoretical mass (about 51.5 kDa). This discrepancy is likely attributed to post-translational modifications, such as glycosylation, phosphorylation, ubiquitination, etc., which are common in plant expression systems and increase the molecular mass of target proteins [21].

To confirm the identity of our target protein and to rule out potential co-migration with endogenous

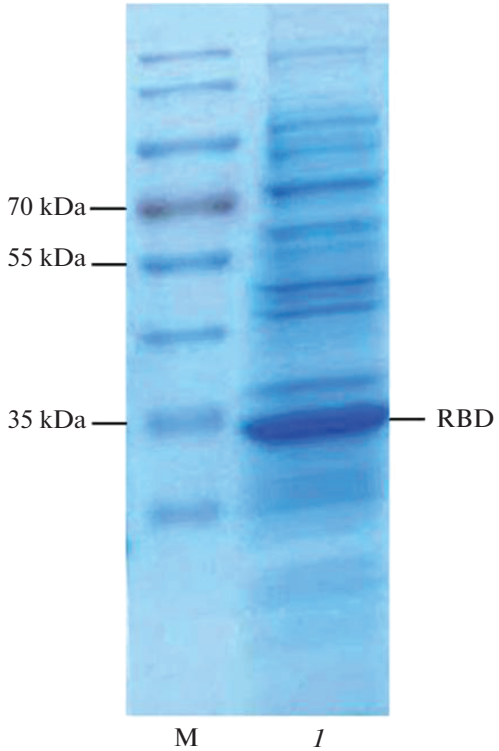

Fig. 4. SDS-PAGE of TSP from recombinant *E. coli* M15 harboring pQE30/RBD vector. M, PageRuler Prestained Protein Ladder (Thermo Fisher Scientific); (*1*), total soluble protein extract.

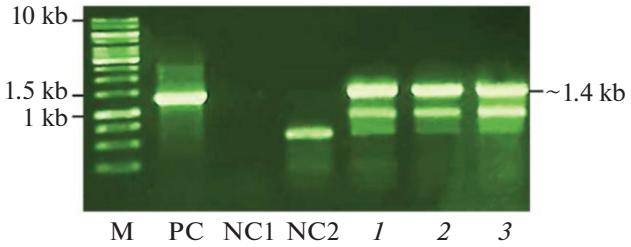

Fig. 5. Verification of the Kozak-A3Dsp-RBD-T4-Linker-C5a-SEKDEL sequence presence in *Agrobacterium*-infiltrated *N. benthamiana* leaves by PCR amplification. M, GeneRuler 1 kb DNA ladder (Thermo Fisher Scientific); PC, pNHL22A vector; NC1, first negative control without template DNA; NC2, second negative control (total DNA from non-transgenic leaves); (*1*)–(*3*), *N. benthamiana* leaves 6, 9, and 12 days post-transgene infiltration, respectively.

N. benthamiana proteins of similar weight, a second electrophoretic gel was used for western blot analysis. Results (Fig. 6b) showed those lanes *1*, *2*, and *3* (transgenic leaf samples) exhibited strong antigen-antibody binding signals at 55 kDa, confirming the primary antibody's specific binding to the RBD-containing peptide. The PC sample (RBD peptide from *E. coli*) also displayed a signal at 35 kDa, consistent with its predicted molecular weight. Critically, the NC sample (non-transgenic *N. benthamiana* leaves) showed no signal, verifying that wild-type leaves do not produce the RBD-T4-Linker-C5a sequence. Thus, it can be concluded that the RBD-T4-Linker-C5a antigen peptide was successfully and specifically expressed in *N. benthamiana* leaves.

Western blot images (Fig. 6b) revealed varying RBD peptide expression levels across different time points. The strongest signal intensity was observed on day 6, whereas the signal on day 9 was the weakest and difficult to discern. Signal intensity analysis (Fig. 6c) indicated that the RBD expression level at 6 days post-infiltration was 6.85 and 34.53 times higher than at 9 and 12 days, respectively.

DISCUSSION

Building upon the presented results, our study not only affirms the successful construction of the expression vector pNHL22B and the production of the RBD peptide as a positive control but also elucidates several other critical aspects. The observed molecular weight discrepancy for the RBD peptide (35 kDa versus the predicted 33 kDa) is a notable finding. The analysis by Guan et al. [16] provides a framework to explain this, suggesting that the acidic amino acid composition of the RBD peptide could contribute to the observed difference. This underscores the importance of considering a protein's chemical properties when comparing theoretical and experimentally observed molecular weights.

The co-infiltration of the *p19* gene with the expression vector in *N. benthamiana* leaves was a pivotal strategy to enhance expression efficiency. The mechanism of *p19*, through its inhibition of the gene-silencing pathway, has been widely demonstrated to significantly improve transient protein expression in plants [18]. The initial confirmation of the target DNA's presence by PCR served as a rapid and effective screening step. However, we acknowledge the potential limitation of PCR in distinguishing integrated target DNA from residual plasmid DNA. That is why thorough leaf washing steps and, crucially, subsequent protein expression analyses (SDS-PAGE, western blotting) were essential to provide stronger evidence that the gene was successfully expressed.

SDS-PAGE and western blot analyses provided robust evidence for the specific expression of the RBD-T4-Linker-C5a antigen peptide in *N. benthamiana* leaves. The minor discrepancy in molecular weight (observed 55 kDa *vs*. theoretical 51.5 kDa) is a common phenomenon in plant expression systems and is often attributed to post-translational modifications such as glycosylation or phosphorylation [21]. These modifications can increase the molecular mass of target proteins and are an important aspect to consider in recombinant protein production in plants.

The protein expression kinetics revealed the strongest RBD peptide signal intensity on day 6 post-infiltration, followed by a gradual decline. This aligns

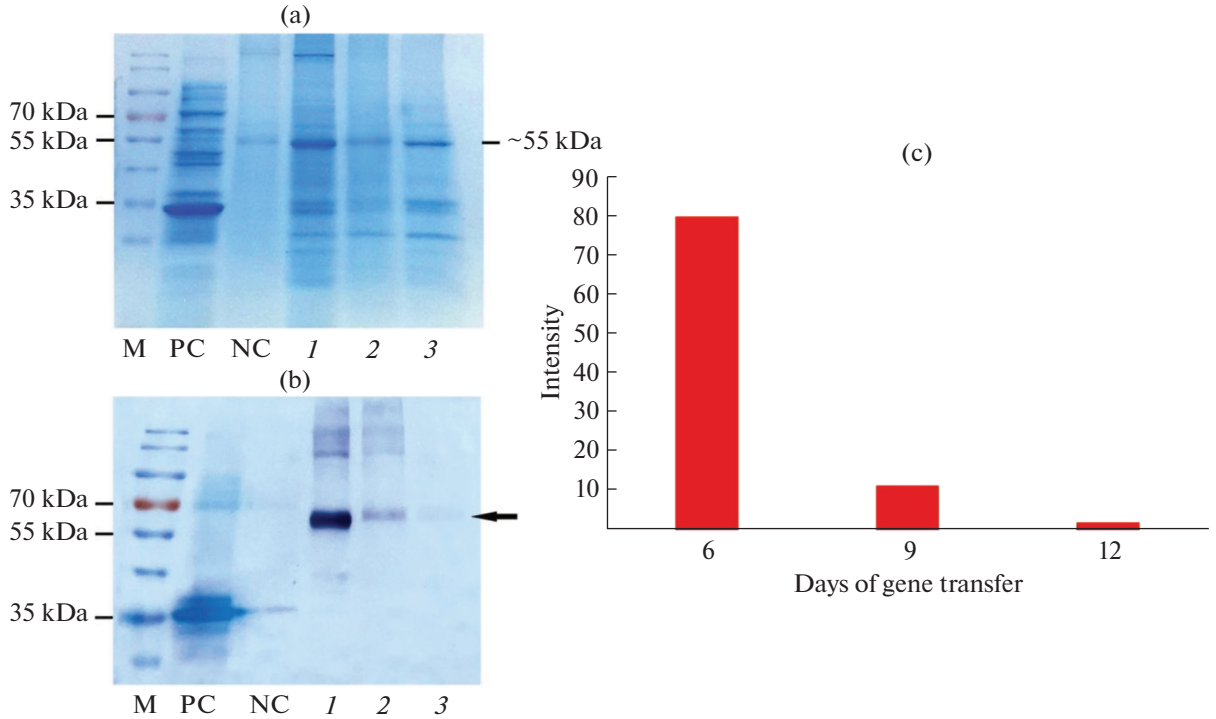

Fig. 6. SDS-PAGE (a) and western blot (b) analysis for the RBD-T4-Linker-C5a sequence in *N. benthamiana* leaves. M, PageRuler Prestained Protein Ladder (Thermo Fisher Scientific); PC, RBD peptide from *E. coli*; NC, non-transgenic *N. benthamiana* plant; (*1*)– (*3*), transgenic *N. benthamiana* plants after 6, 9, and 12 days, respectively. Signal intensity of RBD peptide (c) in *N. benthamiana* leaves at different days post-transgene infiltration.

with other research on transient protein expression in *N. benthamiana*, which typically reports peak expression around 5–7 days post-infiltration [13, 22]. Interestingly, the expression intensity at 6 days post-infiltration in this study was nearly 1.7 times higher than the peak level observed at 7 days in our earlier study (data not shown), suggesting potential optimization of experimental conditions.

Recombinant DNA technology has revolutionized protein production, enabling the efficient and cost-effective synthesis of enzymes and pharmaceutical proteins. Among various expression systems, molecular farming *via Agrobacterium* infiltration into plants has emerged as a promising alternative to mammalian cell systems, particularly for biopharmaceutical production [23, 24]. *N. benthamiana* is a premier choice for this method due to its numerous advantages, including rapid growth, susceptibility to plant viruses, and the ability to produce large quantities of recombinant proteins without hindering downstream purification processes [25]. This plant has proven to be an efficient host for producing various biopharmaceuticals and industrial enzymes [26]. Notably, post-translational modifications in *N. benthamiana* often more closely resemble those in natural hosts compared to other expression systems like *P. pastoris*. Leveraging these advantages, many studies have successfully produced SARS-CoV-2-related proteins in *N. benthamiana* using infiltration, including recombinant SARS-CoV-2 proteins and the RBD of the spike protein [27], glycosylated SARS-CoV-2 antigens [28], RBD from SARS-CoV-2 [29], SARS-CoV-2 neutralizing antibodies [30], and SARS-CoV-2 antigens for diagnostics and subunit vaccine production [31].

In conclusion, the 1392 bp Kozak-A3Dsp-RBD-T4-Linker-C5a-SEKDEL sequence was successfully cloned into the pMYV719 plant expression vector and subsequently conjugated into *A. tumefaciens* LBA4404 for genetic transformation. Additionally, S1 RBD protein was successfully produced for use as a positive control in western blot analyses. Notably, the RBD-T4-Linker-C5a peptide was successfully expressed in *N. benthamiana* leaves through *Agrobacterium* infiltration, with optimal expression observed at 6 days post-infiltration.

ABBREVIATIONS AND NOTATION

BatCoV RaTG13	bat coronavirus RaTG13
H5N1 and H7N9	avian influenza A virus subtype H5N1 and H7N9
HR1 and HR2	heptad repeats
RBD	receptor-binding domain
SARS-CoV-2	severe acute respiratory syndrome coronavirus 2

ACKNOWLEDGMENTS

The authors thank the partial support of Hue University under the Core Research Program, grant no. NCTB.DHH.2025.04.

FUNDING

This work was supported by ongoing institutional funding. No additional grants to carry out or direct this particular research were obtained.

ETHICS APPROVAL AND CONSENT TO PARTICIPATE

This work does not contain any studies involving human and animal subjects.

CONFLICT OF INTEREST

The authors of this work declare that they have no conflicts of interest.

REFERENCES

1. Farhud, D.D. and Zokaei, S., A brief overview of COVID-19 vaccines, *Iranian Journal of Public Health*, 2021, vol. 50, no. 7, pp. 1–6. https://doi.org/10.18502/ijph.v50i7.6656
2. *Follow-Up Data From Phase 3 Trial of Pfizer-BioNTech COVID-19 Vaccine Support Safety and High Efficacy in Adolescents 12 Through 15 Years of Age*, Pfizer Inc. and BioNTech SE, 2021. https://www.pfizer.com/news/press-release/press-release-detail/follow-data-phase-3-trial-pfizer-biontech-covid-19-vaccine. Accessed July 19, 2025.
3. Santana-Mederos, D., Perez-Nicado, R., Climent, Y., Rodriguez, L., Ramirez, B.S., Perez-Rodriguez, S., Rodriguez, M., Labrada, C., Hernandez, T., Diaz, M., Orosa, I., Ramirez, U., Oliva, R., Garrido, R., Cardoso, F., et al., A COVID-19 vaccine candidate composed of the SARS-CoV-2 RBD dimer and *Neisseria meningitidis* outer membrane vesicles, *RSC Chemical Biology*, 2022, vol. 3, no. 2, pp. 242–249. https://doi.org/10.1039/d1cb00200g
4. Beritza, K., Watts, E.C., and van der Hoorn, R.A.L., Improving transient protein expression in agroinfiltrated *Nicotiana benthamiana, New Phytol.*, 2024, vol. 243, no. 3, pp. 846–850. https://doi.org/10.1111/nph.19894
5. Li, T., Kan, Q., Ge, J., Wan, Z., Yuan, M., Huang, Y., Xie, Q., Yang, Y., Shao, H., Li, X., Ye, L., Qin, A., Bu, Z., Liu, P., and Ye, J., A novel linear and broadly neutralizing peptide in the SARS-CoV-2 S2 protein for universal vaccine development, *Cellular and Molecular Immunology*, 2021, vol. 18, no. 11, pp. 2563–2565. https://doi.org/10.1038/s41423-021-00778-6
6. Wang, R., Xiao, H., Guo, R., Li, Y., and Shen, B., The role of C5a in acute lung injury induced by highly pathogenic viral infections, *Emerging Microbes and Infections*, 2015, vol. 4, no. 1, pp. 1–7. https://doi.org/10.1038/emi.2015.28
7. Law, J.L.M., Logan, M., Joyce, M.A., Landi, A., Hockman, D., Crawford, K., Johnson, J., LaChance, G., Saffran, H.A., Shields, J., Hobart, E., Brassard, R., Arutyunova, E., Pabbaraju, K., Croxen, M., Tipples, G., Lemieux, M.J., Tyrrell, D.L., and Houghton, M., SARS-COV-2 recombinant Receptor-Binding-Domain (RBD) induces neutralizing antibodies against variant strains of SARS-CoV-2 and SARS-CoV-1, *Vaccine*, 2021, vol. 39, no. 40, pp. 5769–5779. https://doi.org/10.1016/j.vaccine.2021.08.081
8. Kim, A.H.J., Dimitriou, I.D., Holland, M.C.H., Mastellos, D., Mueller, Y.M., Altman, J.D., Lambris, J.D., and Katsikis, P.D., Complement C5a receptor is essential for the optimal generation of antiviral CD8+ T cell responses, *J. Immunol.*, 2004, vol. 173, no. 4, pp. 2524–2529. https://doi.org/10.4049/jimmunol.173.4.2524
9. Jung, J.-W., Kim, N.-S., Jang, S.-H., Shin, Y.-J., and Yang, M.-S., Production and characterization of recombinant human acid α-glucosidase in transgenic rice cell suspension culture, *J. Biotechnol.*, 2016, vol. 226, pp. 44–53. https://doi.org/10.1016/j.jbiotec.2016.03.031
10. Valášek, L.S., Kozak consensus sequence, in *Encyclopedia of Systems Biology*, Dubitzky, W., Wolkenhauer, O., Cho, K.H., and Yokota, H., Eds., New York: Springer, 2013, p. 1087.
11. Zagouras, P. and Rose, J.K., Carboxy-terminal SEKDEL sequences retard but do not retain two secretory proteins in the endoplasmic reticulum, *J. Cell Biol.*, 1989, vol. 109, no. 6, pp. 2633–2640. https://doi.org/10.1083/jcb.109.6.2633
12. Tue, N.H., Luong, N.N., and Tien, N.Q.D., Cloning an RBD-T4-LINKER-C5a sequence encoding the SARS-CoV-2 antigen into a plant expression vector, *Hue University Journal of Science: Natural Science*, 2023, vol. 132, no. 1d, pp. 73–78. https://doi.org/10.26459/hueunijns.v132i1d.7075
13. Tien, N.Q.D., Hoa, P.T.B., Tue, N.H., Van Thanh, D., Thi, H.A., Luong, N.N., Huy, N.X., and Loc, N.H., Transient expression of *Chi42* genes from *Trichoderma asperellum* in *Nicotiana benthamiana* by agroinfiltration, *Int. J. Agric. Biol.*, 2021, vol. 26, no. 1, pp. 177–184. https://doi.org/10.17957/IJAB/15.1822
14. Aboul-Maaty, N.A.-F. and Oraby, H.A.-S., Extraction of high-quality genomic DNA from different plant orders applying a modified CTAB-based method, *Bull. Natl. Res. Cent.*, 2019, vol. 43, no. 1, p. 25. https://doi.org/10.1186/s42269-019-0066-1
15. Bradford, M.M., A rapid and sensitive method for the quantitation of microgram quantities of protein utilizing the principle of protein-dye binding, *Anal. Biochem.*, 1976, vol. 72, nos. 1–2, pp. 248–254. https://doi.org/10.1016/0003-2697(76)90527-3
16. Guan, Y., Zhu, Q., Huang, D., Zhao, S., Jan Lo, L., and Peng, J., An equation to estimate the difference between theoretically predicted and SDS PAGE-displayed molecular weights for an acidic peptide, *Sci. Rep.*, 2015, vol. 5, no. 1, p. 13370. https://doi.org/10.1038/srep13370
17. Danielson, D.C. and Pezacki, J.P., Studying the RNA silencing pathway with the *p19* protein, *FEBS Lett.*, 2013, vol. 587, no. 8, pp. 1198–1205. https://doi.org/10.1016/j.febslet.2013.01.036

18. Lindbo, J.A., High-efficiency protein expression in plants from agroinfection-compatible *Tobacco mosaic virus* expression vectors, *BMC Biotechnol.*, 2007, vol. 27, no. 7, pp. 52.
https://doi.org/10.1186/1472-6750-7-52
19. Yamamoto, T., Hoshikawa, K., Ezura, K., Okazawa, R., Fujita, S., Takaoka, M., Mason, H.S., Ezura, H., and Miura, K., Improvement of the transient expression system for production of recombinant proteins in plants, *Sci. Rep.*, 2018, vol. 8, no. 1, p. 4755.
https://doi.org/10.1038/s41598-018-23024-y
20. Zhao, H., Tan, Z., Wen, X., and Wang, Y., An improved syringe agroinfiltration protocol to enhance transformation efficiency by combinative use of 5-azacytidine, ascorbate acid and Tween-20, *Plants*, 2017, vol. 6, no. 1, p. 9.
https://doi.org/10.3390/plants6010009
21. Ramazi, S. and Zahiri, J., Post-translational modifications in proteins: Resources, tools and prediction methods, *Database*, 2021, vol. 2021, p. baab012.
https://doi.org/10.1093/database/baab012
22. Kim, K., Kang, Y.J., Park, S.R., Kim, D.-S., Lee, S.-W., Ko, K., Ponndorf, D., and Ko, K., Effect of leaf position and days post-infiltration on transient expression of colorectal cancer vaccine candidate proteins GA733-Fc and GA733-FcK in *Nicotiana benthamiana* plant, *PeerJ*, 2021, vol. 9, p. e10851.
https://doi.org/10.7717/peerj.10851
23. Bally, J., Jung, H., Mortimer, C., Naim, F., Philips, J.G., Hellens, R., Bombarely, A., Goodin, M.M., and Waterhouse, P.M., The rise and rise of*Nicotiana benthamiana*: A plant for all reasons, *Annu. Rev. Phytopathol.*, 2018, vol. 56, no. 1, pp. 405–426.
https://doi.org/10.1146/annurev-phyto-080417-050141
24. Shanmugaraj, B., I Bulaon, C.J., and Phoolcharoen, W., Plant molecular farming: A viable platform for recombinant biopharmaceutical production, *Plants*, 2020, vol. 9, no. 7, p. 842.
https://doi.org/10.3390/plants9070842
25. Wroblewski, T., Tomczak, A., and Michelmore, R., Optimization of *Agrobacterium*-mediated transient assays of gene expression in lettuce, tomato and *Arabidopsis, Plant Biotechnol. J.*, 2005, vol. 3, no. 2, pp. 259–273.
https://doi.org/10.1111/j.1467-7652.2005.00123.x
26. van Eerde, A., Várnai, A., Jameson, J.K., Paruch, L., Moen, A., Anonsen, J.H., Chylenski, P., Steen, H.S., Heldal, I., Bock, R., Eijsink, V.G.H., and Liu-Clarke, J., In-depth characterization of *Trichoderma reesei* cellobiohydrolase *Tr*Cel7A produced in *Nicotiana benthamiana* reveals limitations of cellulase production in plants by host-specific post-translational modifications, *Plant Biotechnol. J.*, 2020, vol. 18, no. 3, pp. 631–643.
https://doi.org/10.1111/pbi.13227
27. Diego-Martin, B., González, B., Vazquez-Vilar, M., Selma, S., Mateos-Fernández, R., Gianoglio, S., Fernández-del-Carmen, A., and Orzáez, D., Pilot production of SARS-CoV-2 related proteins in plants: A proof of concept for rapid repurposing of indoor farms into biomanufacturing facilities, *Front. Plant Sci.*, 2020, vol. 11, p. 612781.
https://doi.org/10.3389/fpls.2020.612781
28. Ruocco, V. and Strasser, R., Transient expression of glycosylated SARS-CoV-2 antigens in *Nicotiana benthamiana, Plants*, 2022, vol. 11, no. 8, p. 1093.
https://doi.org/10.3390/plants11081093
29. Ceballo, Y., López, A., González, C.E., Ramos, O., Andújar, I., Martínez, R.U., and Hernández, A., Transient production of receptor-binding domain of SARS-CoV-2 in *Nicotiana benthamiana* plants induces specific antibodies in immunized mice, *Mol. Biol. Rep.*, 2022, vol. 49, no. 7, pp. 6113–6123.
https://doi.org/10.1007/s11033-022-07402-4
30. Frigerio, R., Marusic, C., Villani, M.E., Lico, C., Capodicasa, C., Andreano, E., Paciello, I., Rappuoli, R., Salzano, A.M., Scaloni, A., Baschieri, S., and Donini, M., Production of two SARS-CoV-2 neutralizing antibodies with different potencies in *Nicotiana benthamiana, Front. Plant Sci.*, 2022, vol. 13, p. 956741.
https://doi.org/10.3389/fpls.2022.956741
31. Demone, J., Maltseva, M., Nourimand, M., Nasr-Sharif, M., Galipeau, Y., Alarcon, E.I., Langlois, M.-A., and MacLean, A.M., Scalable agroinfiltration-based production of SARS-CoV-2 antigens for use in diagnostic assays and subunit vaccines, *PLoS One*, 2022, vol. 17, no. 12, p. e0277668.
https://doi.org/10.1371/journal.pone.0277668

Publisher's Note. Pleiades Publishing remains neutral with regard to jurisdictional claims in published maps and institutional affiliations.
AI tools may have been used in the translation or editing of this article.

SPELL: OK